Northmore Gordon

Best practice heating systems for aquatic centres

Local Government Procurement Webinar

Energy and Carbon Performance Consultants

Northmore Gordon is an energy and carbon consultancy helping industrial and large commercial businesses reduce costs while become more sustainable enterprises.

Increasingly, enterprises are seeking to become more competitive and better global citizens by reducing their carbon footprint. At Northmore Gordon, we recognise the complexity of balancing costs while maintaining a long-term view of energy usage and environmental sustainability.

Our experts help you achieve a new level of energy efficiency and greenhouse gas performance through end-to-end energy performance management tools, services and expertise.

Services summary

Strategic Energy Sourcing

- Energy Contract Renewal
- Market Based Solutions
- REC Procurement
- Bill Validation and Audit
- Reporting and Data Management

Certificates and Grants

- Independent M&V
- I-RECs
- REG-E Grants
- E2F Grants

Corporate Energy and Carbon Strategy

- Strategic Energy and Greenhouse Advice
- Energy Management Systems
- Partnership Programs for Energy Savings

Technical Services

- Audit and Compliance
- Engineering
- Project Delivery
- Metering and Reporting
- Corporate Training
- Industry Guides

Key Observations

- Pools are considered a vital asset to the community.
- Financing projects is challenging.
- Can exist a split incentive between Council owner and 3rd party operator.
- Big variance in energy consumption and technology b/w annually operated Recreation Centres and seasonal pools
- Energy systems are often not well optimised

Energy use in aquatic centres

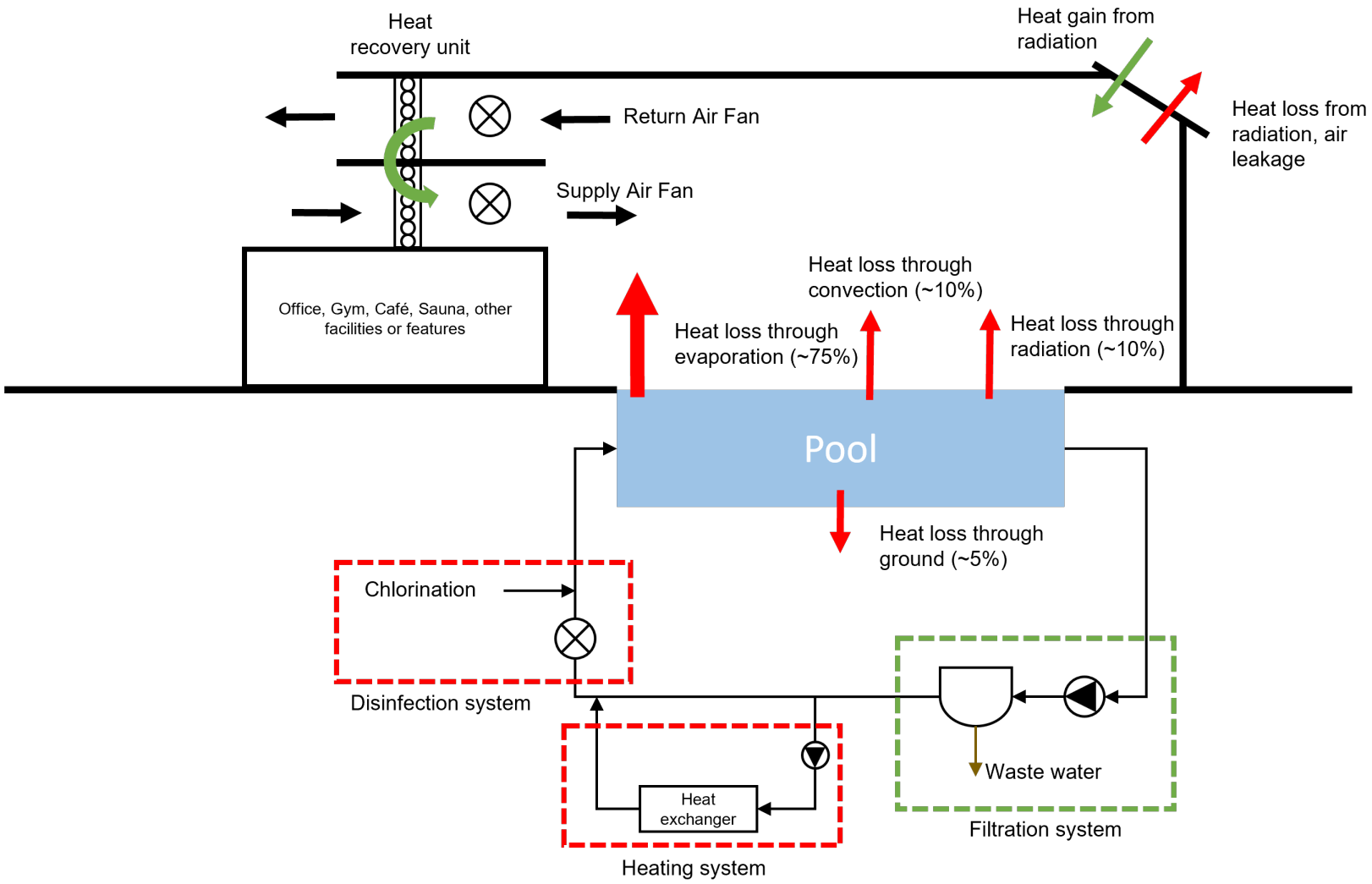

Key Energy Saving Opportunities

Recirculation Pumps VSD

(1 year payback)

Fixed speed pumps very common across all pools.

Lighting Upgrade

(<3 year payback)

Most had old technology fittings

Heat Pumps DHW

(8 year payback)

Electric or LPG hot water heaters could be replaced with heat pumps. DHW units are readily available on the market

Behavioural

(<1 year)

Ensure most energy efficient technology is chosen. Do not run equipment for longer than required.

Lower CAPEX opportunities

	Short payback (< 4 years)	Long payback (> 4 years)
Low cost action **($0 to $2,000)**	To implement immediately: (i) Reduce pool water temperature set point (permanent or seasonal adjustment) (ii) Increase relative humidity set point (iii) Optimisation of filter backwashing (iv) Pipe insulation	
High cost action (>$5,000)	Recommended for implementation (i) Pool cover overnight (ii) Control circulation pumps with VSDs not throttling valves	To be considered for pool redevelopment (i) Reduce air movement above pool water (ii) Pool hall insulation (iii) Pool wall insulation

Alternative heating technologies

Heating technology	Rated efficiency	Energy Source	To generate 1 GJ of heat			Maintenance costs
			Energy input (GJ gas or GJ electricity/GJ heat)	Energy cost ($/GJ heat)	GHG emission (kg CO2/GJ heat)	
Gas Boiler	85%	Gas	1.18	$20.59	61	$
Electric heat pump	COP: 4	Electricity + Air/Water/Ground…	0.25	$10.07	55	$$
Biomass boiler	80%	Biomass	1.25	$10.00	0	$$$
Solar thermal	50%	Sun	0.00	free	0	$
Gas fired co-generation (at 100% heat recovery)	45% thermal 30% electricity 75% overall	Gas	2.22	$12.04	-32	$$$

Assumptions used in this table are:

- **Electricity price: $145.00/MWh**
- **Gas price: $17.50/GJ[7]**
- **Biomass price: $8.00/GJ delivered[7]**
- **Electricity GHG emission (Scope 2): 0.79 kg CO2/kWh**
- **Gas GHG emission (Scope 2): 51.53 kg CO2/GJ**

Heating technology	Footprint	Pros and Cons
Gas boiler	Small	✓ Widely used technology ✓ Wide operating range ✓ Suitable as the sole source of heat of the pool ✗ Low efficiency of energy conversion
Electric Heat Pump	Small	✓ Widely used technology ✓ Wide operating range ✓ Suitable as the sole source of heat of the pool ✗ Require a heat source
Biomass boiler	Medium (fuel storage)	✓ Might be suitable as the primary source of heat of the pool: depends on the fuel availability ✗ Not widely used ✗ Require long-term contractual agreement for fuel supply
Solar thermal	High	✗ Cannot be used as the sole source of heat ✗ Weather and season dependent
Gas fired cogeneration system	Small	✗ Cannot be used as the sole source of heat ✗ Not compatible with solar PV (unless export is possible) ✗ Less attractive as the electricity grid decarbonises

Heat pump considerations

- Successful implementation requires good design integration
- Icing risk in cool climates
- Opportunity to remove intermediate heating loops
- Good opportunity for DHW
- Business cases sensitive to energy prices

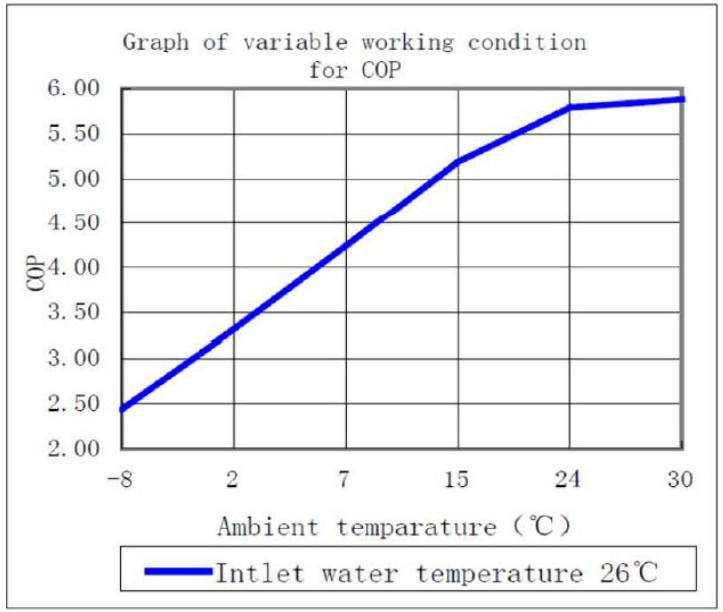

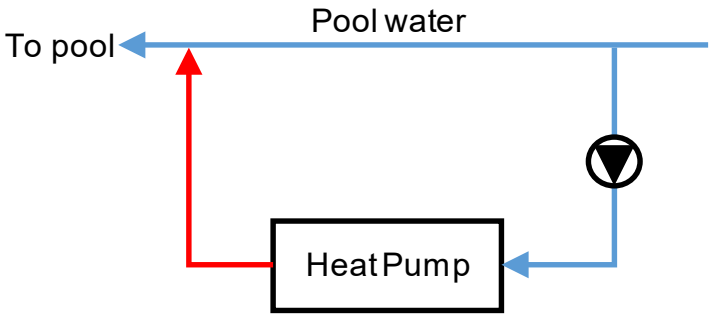

More energy efficient configuration

Case Study – Business case for Sydney Aquatic Centre

- Energy audit for Sydney Aquatic Centre identified opportunity for replacement of gas boiler with heat pump
- 600kW capacity proposed with gas boiler remaining as back up

Electricity savings MWh p.a.	Gas savings GJ) p.a.	Energy cost savings $ p.a.	Capital cost $	Payback period (years)	Net Present Value $	GHG savings tonnes CO2 p.a.
-466	6758	$51,625	$441,872	8.6	$59,519	-14

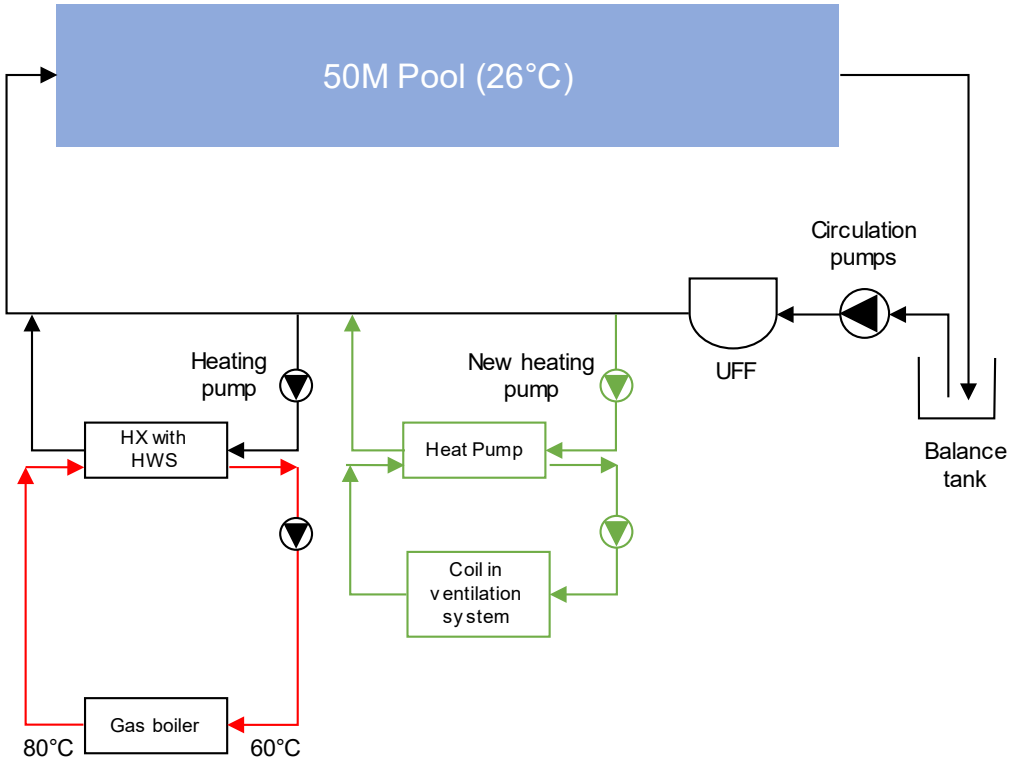

Accessing certificate funding

Scheme	Activity	Type	
NSW ESS	Project Impact Assessment Measurement and Verification	M&V	Forward creation for 10 years
NSW ESS	Installation of High Energy Efficiency Appliances for Business	Deemed	Calculated savings
Victorian Energy Upgrades	Project Based Activities	M&V	Forward creation for 10 years
Victorian Energy Upgrades	Water heating, and space heating and cooling activities	Deemed	Calculated savings
Federal ERF	Industrial Equipment Upgrades	M&V	Annual creation for 7 years

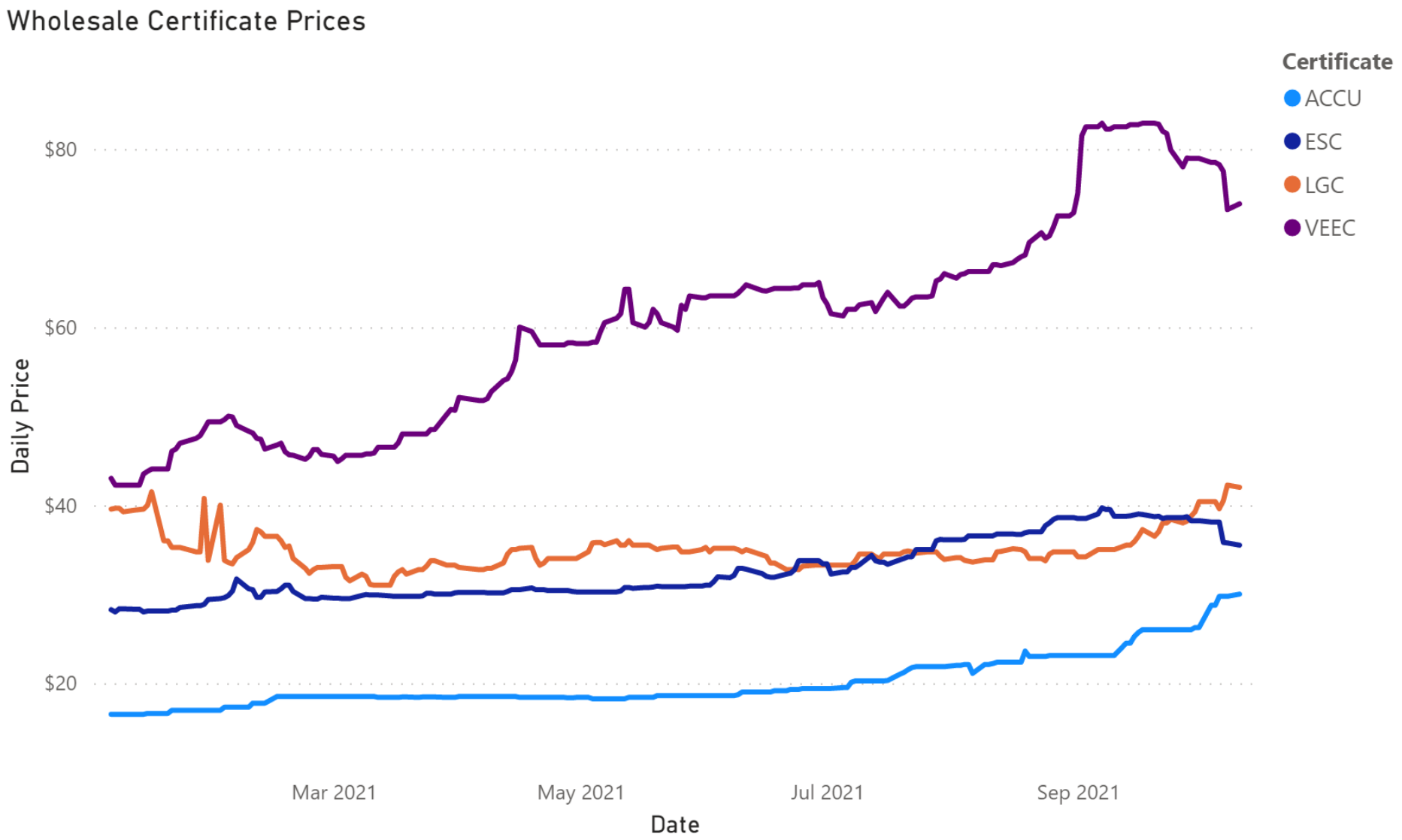
Wholesale Certificate Prices
Certificate
ACCU
ESC
LGC
VEEC
$80
$60
$40
$20
Daily Price
Mar 2021
May 2021
Jul 2021
Sep 2021
Date

1:

Case Study – BMS upgrade for Victorian Aquatic Centre

- Upgrade of digital controls and sensors - enabled better control of HVAC fan speeds
- Northmore Gordon engaged to assist with VEEC funding
- Energy savings estimated using Project Based Assessment activity in VEU
- Project created 2,000 VEECs, >$100k of revenue.

Find out more:

- https://www.environment.nsw.gov.au/resources/business/aquatic-centres-energy-efficient-water-heating-technology-guide-190115.pdf

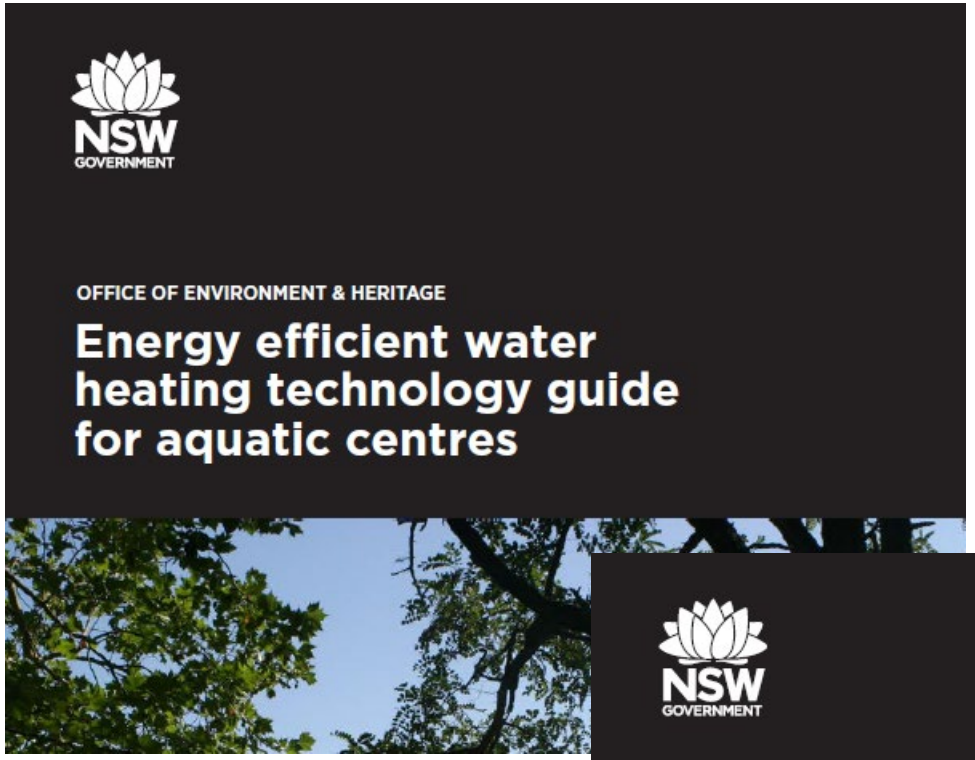

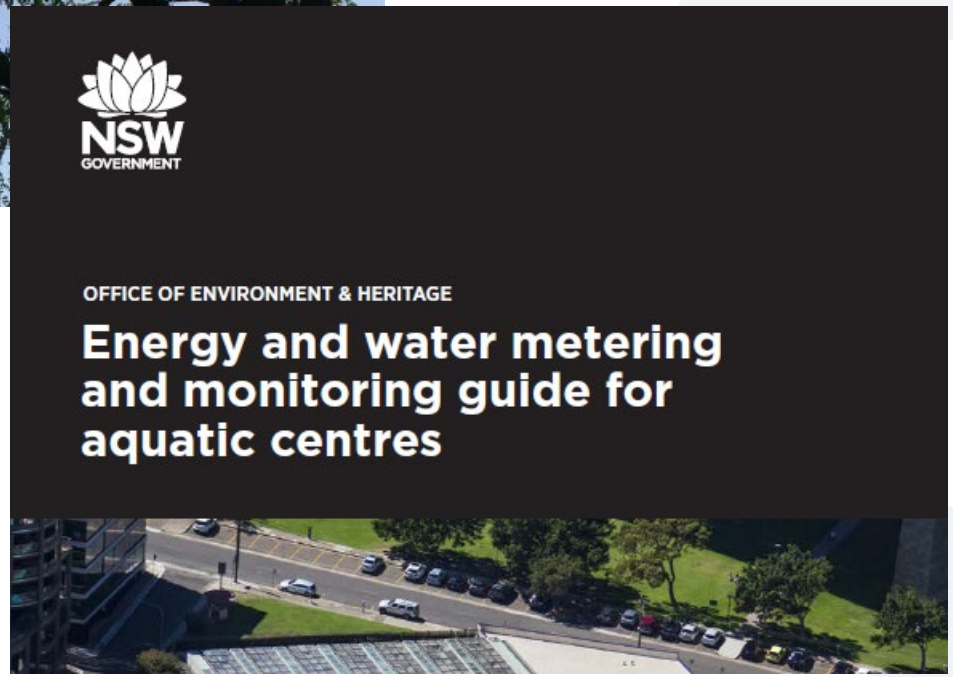

Northmore Gordon

Start your journey towards energy and carbon performance today

Trent Hawkins
Mob: 0407 070 841
email: trent@northmoregordon.com